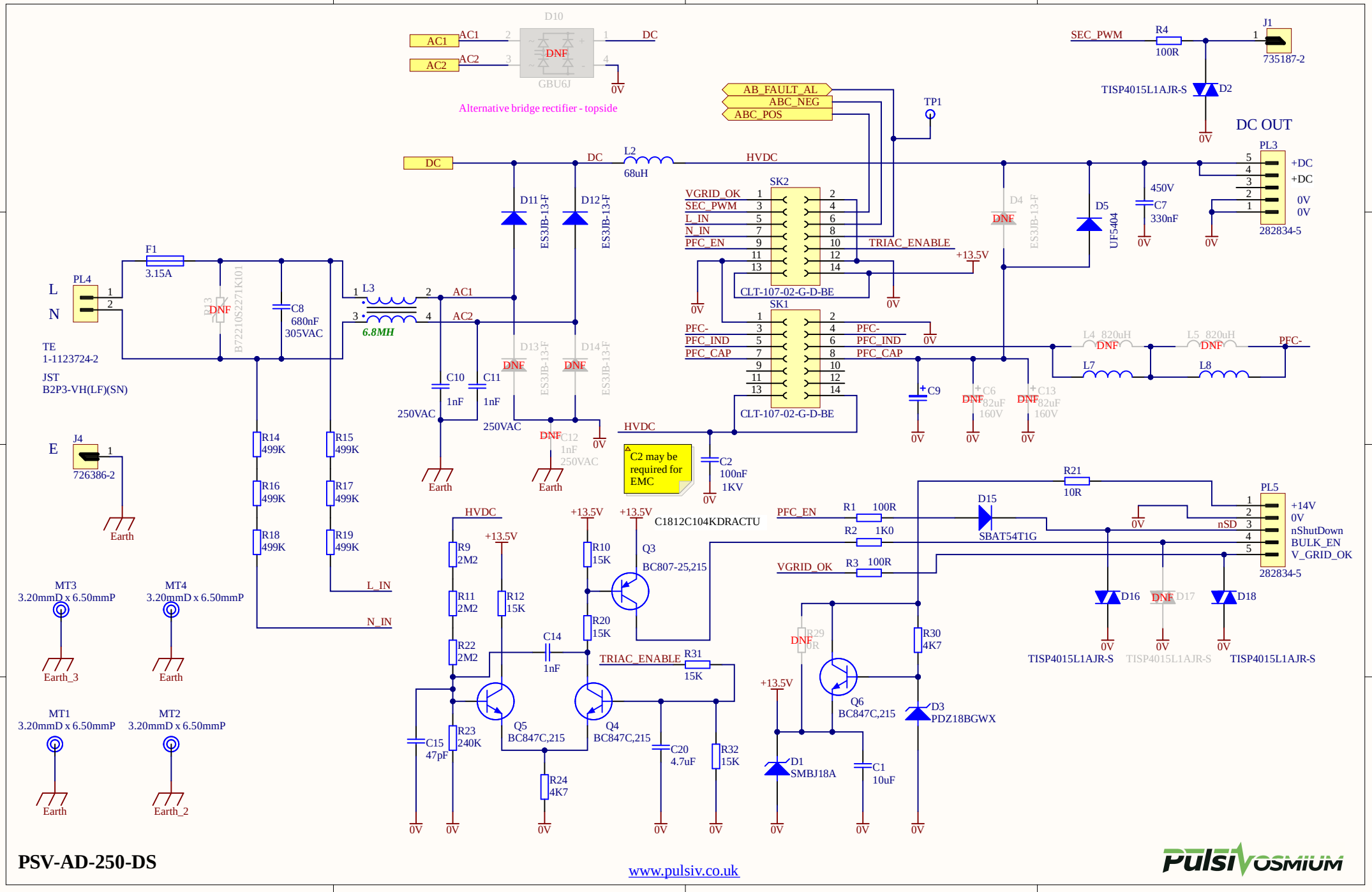

PSV-AD-250-DS

www.pulsiv.co.uk

PULSIVOSMIUM

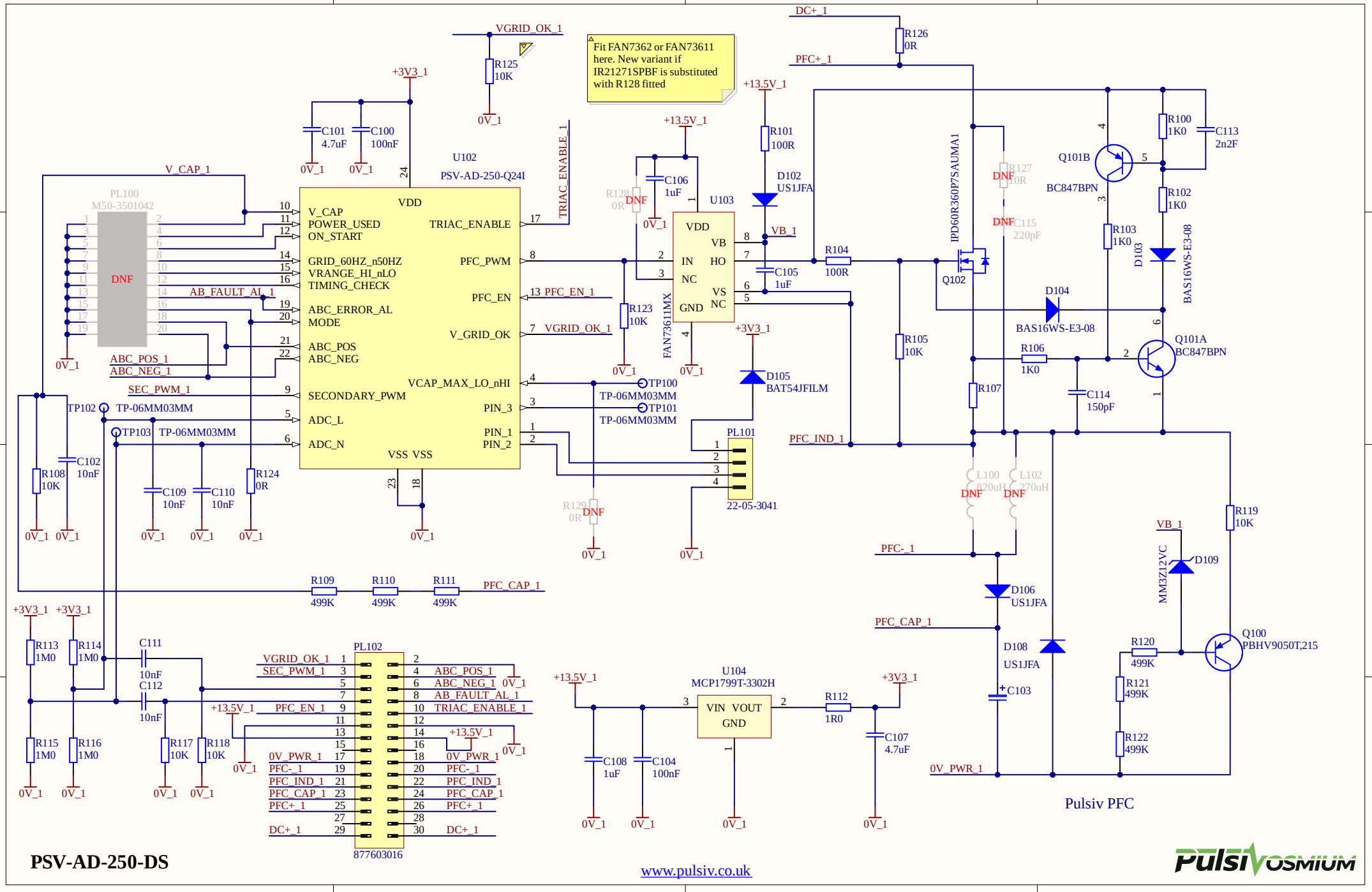
Fit FAN7362 or FAN73611 here. New variant if IR21271SPBF is substituted with R128 fitted
U102
PSV-AD-250-Q24I
VDD
V_CAP
POWER_USED
ON_START
GRID_60HZ_n50HZ
VRANGE_HI_nLO
TIMING_CHECK
ABC_ERROR_AL
MODE
ABC_POS
ABC_NEG
SECONDARY_PWM
ADC_L
ADC_N
VSS VSS
TRIAC_ENABLE
PFC_PWM
PFC_EN
V_GRID_OK
VCAP_MAX_LO_nHI
PIN_3
PIN_1
PIN_2
U103
FAN73611MX
VDD
VB
IN
HO
NC
VS
GND
NC
PL100
M50-3501042
DNF
PL101
22-05-3041
PL102
877603016
U104
MCP1799T-3302H
VIN VOUT
GND
IPD60R360P7SAUMA1
Q102
Q101B
BC847BPN
Q101A
BC847BPN
D102
US1JFA
D103
BAS16WS-E3-08
D104
BAS16WS-E3-08
D105
BAT54JFILM
D106
US1JFA
D108
US1JFA
D109
MM3Z12VC
Q100
PBHV9050T,215
L100
820uH
L102
270uH
VGRID_OK_1
V_CAP_1
AB_FAULT_AL_1
ABC_POS_1
ABC_NEG_1
SEC_PWM_1
PFC_EN_1
TRIAC_ENABLE_1
PFC_IND_1
PFC_CAP_1
PFC+_1
PFC-_1
DC+_1
0V_PWM_1
VB_1
+3V3_1
+13.5V_1
0V_1
TP100
TP101
TP102
TP103
TP-06MM03MM
Pulsiv PFC
PSV-AD-250-DS
www.pulsiv.co.uk
PULSIV OSMIUM

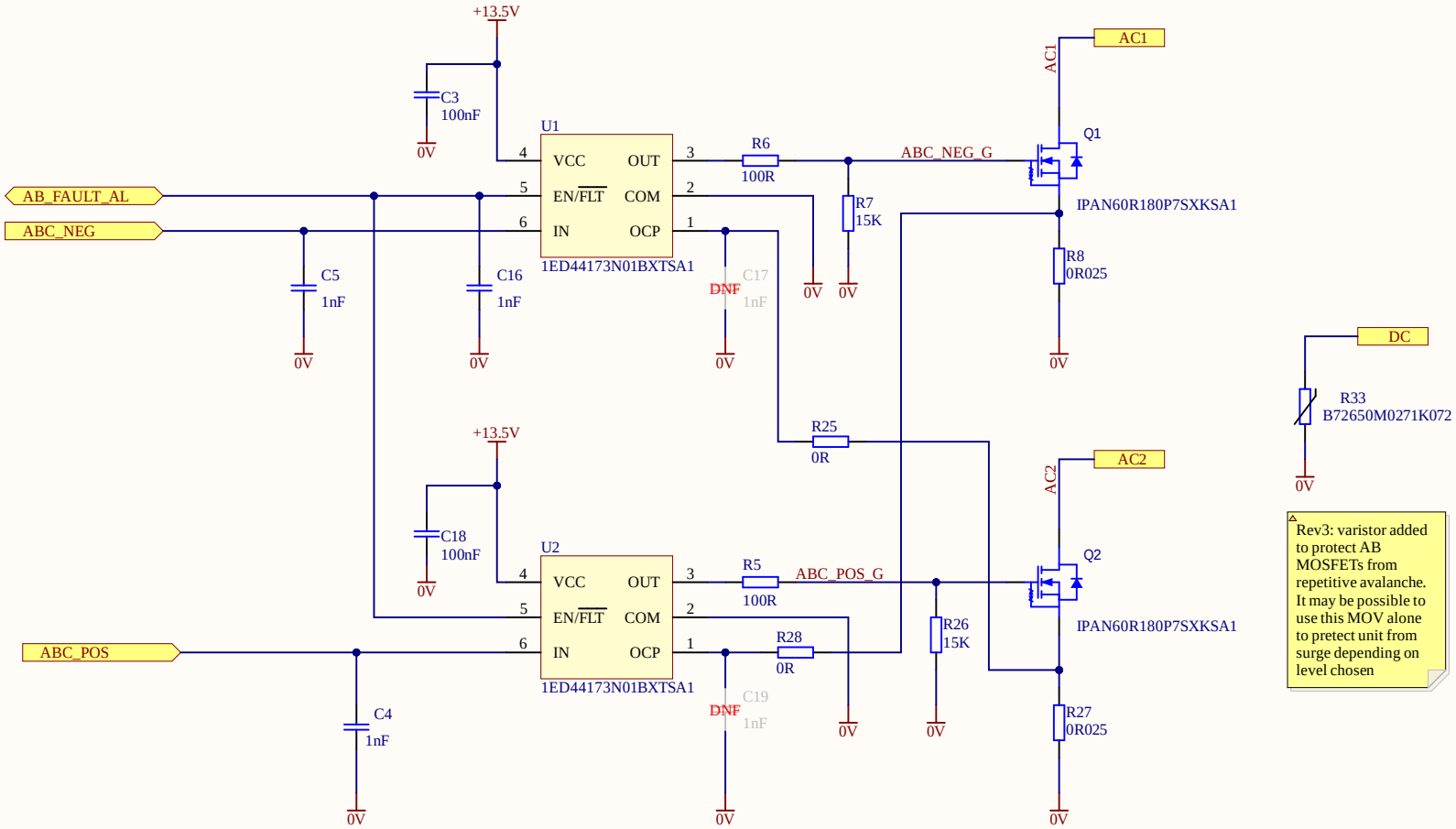

PSV-AD-250-DS

www.pulsiv.co.uk