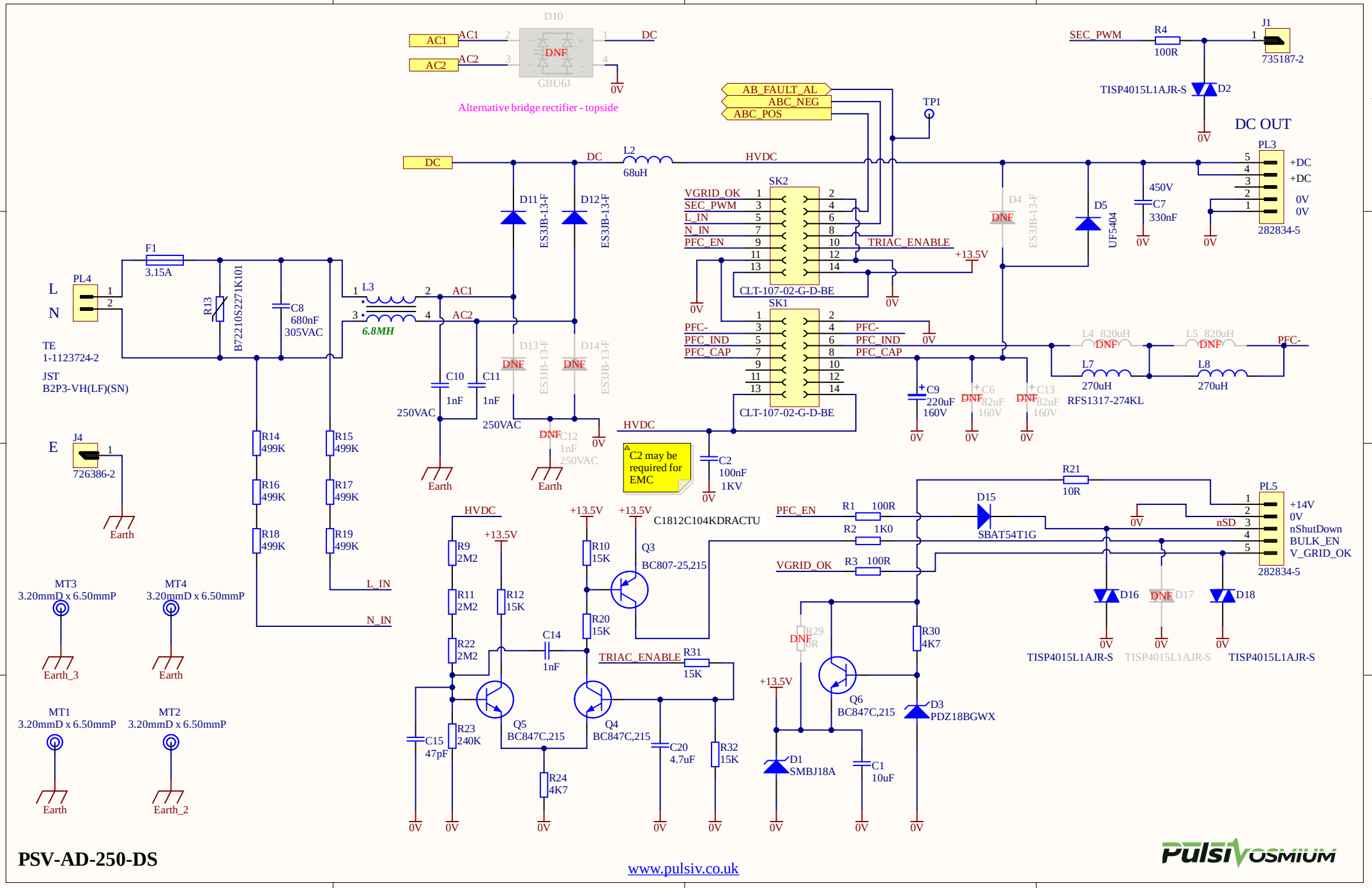

PSV-AD-250-DS

www.pulsiv.co.uk

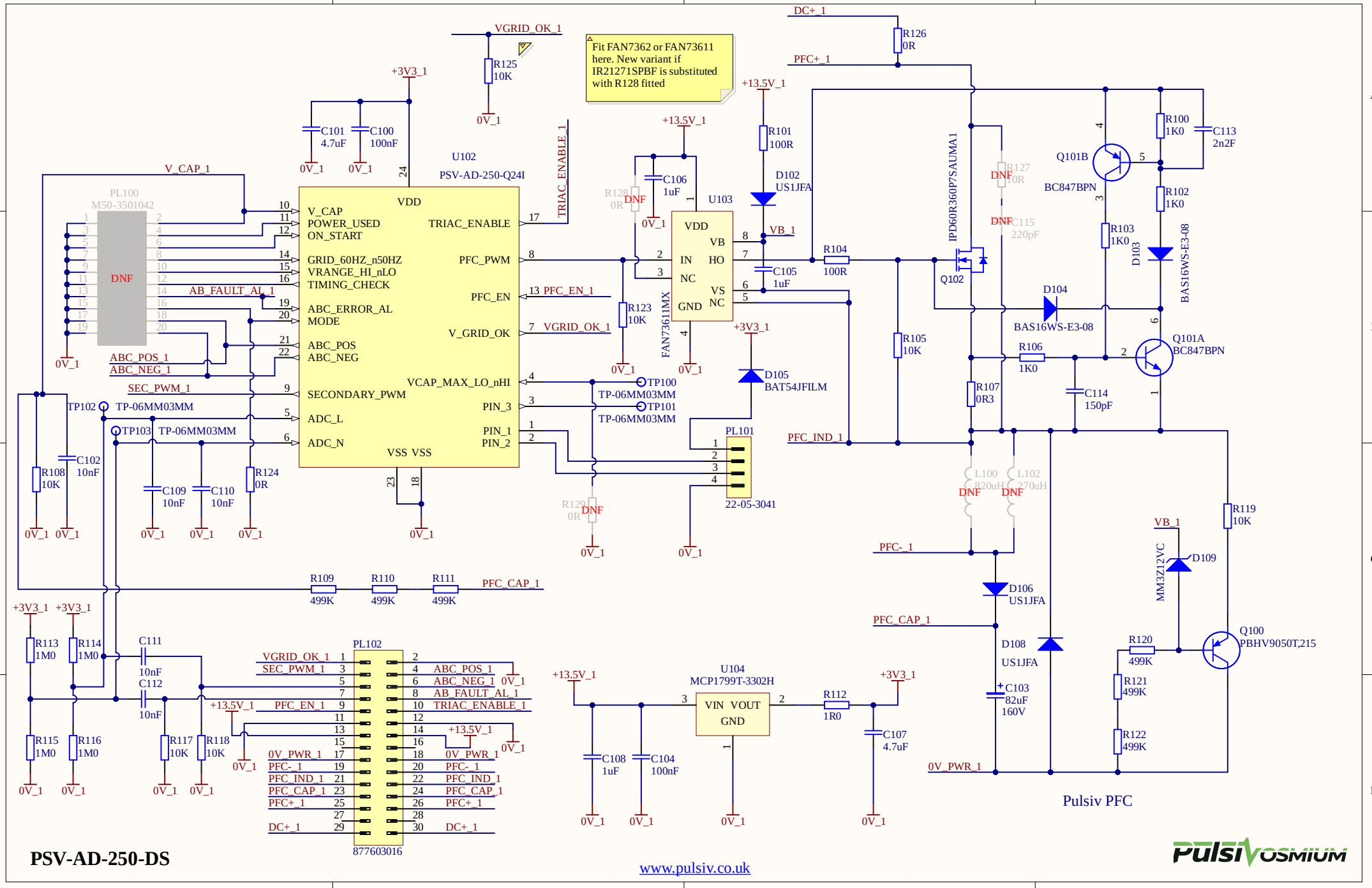
Fit FAN7362 or FAN73611 here. New variant if IR21271SPBF is substituted with R128 fitted
U102
PSV-AD-250-Q24I
VDD
V_CAP
POWER_USED
ON_START
GRID_60HZ_n50HZ
VRANGE_HI_nLO
TIMING_CHECK
ABC_ERROR_AL
MODE
ABC_POS
ABC_NEG
SECONDARY_PWM
ADC_L
ADC_N
VSS VSS
TRIAC_ENABLE
PFC_PWM
PFC_EN
V_GRID_OK
VCAP_MAX_LO_nHI
PIN_3
PIN_1
PIN_2
U103
FAN73611MX
VDD
VB
IN
HO
NC
VS
GND
NC
U104
MCP1799T-3302H
VIN VOUT
GND
PL100
M50-3501042
DNF
PL101
22-05-3041
PL102
877603016
Q101B
BC847BPN
Q101A
BC847BPN
Q102
IPD60R360P7SAUMA1
Q100
PBHV9050T,215
D102
US1JFA
D103
BAS16WS-E3-08
D104
BAS16WS-E3-08
D105
BAT54JFILM
D106
US1JFA
D108
US1JFA
D109
MM3Z12VC
VGRID_OK_1
TRIAC_ENABLE_1
PFC_EN_1
AB_FAULT_AL_1
ABC_POS_1
ABC_NEG_1
SEC_PWM_1
V_CAP_1
PFC_CAP_1
PFC_IND_1
PFC+_1
PFC-_1
DC+_1
0V_PWR_1
VB_1
+13.5V_1
+3V3_1
0V_1
TP100
TP101
TP102
TP103
TP-06MM03MM
R126 0R
R125 10K
R101 100R
R100 1K0
R102 1K0
R103 1K0
R104 100R
R105 10K
R106 1K0
R107 0R3
R108 10K
R109 499K
R110 499K
R111 499K
R112 1R0
R113 1M0
R114 1M0
R115 1M0
R116 1M0
R117 10K
R118 10K
R119 10K
R120 499K
R121 499K
R122 499K
R123 10K
R124 0R
R127 10R
R128 0R
R129 0R
C100 100nF
C101 4.7uF
C102 10nF
C103 82uF 160V
C104 100nF
C105 1uF
C106 1uF
C107 4.7uF
C108 1uF
C109 10nF
C110 10nF
C111 10nF
C112 10nF
C113 2n2F
C114 150pF
C115 220pF
L100 820uH
L102 270uH
PSV-AD-250-DS
Pulsiv PFC
www.pulsiv.co.uk
PulsiVOSMIUM

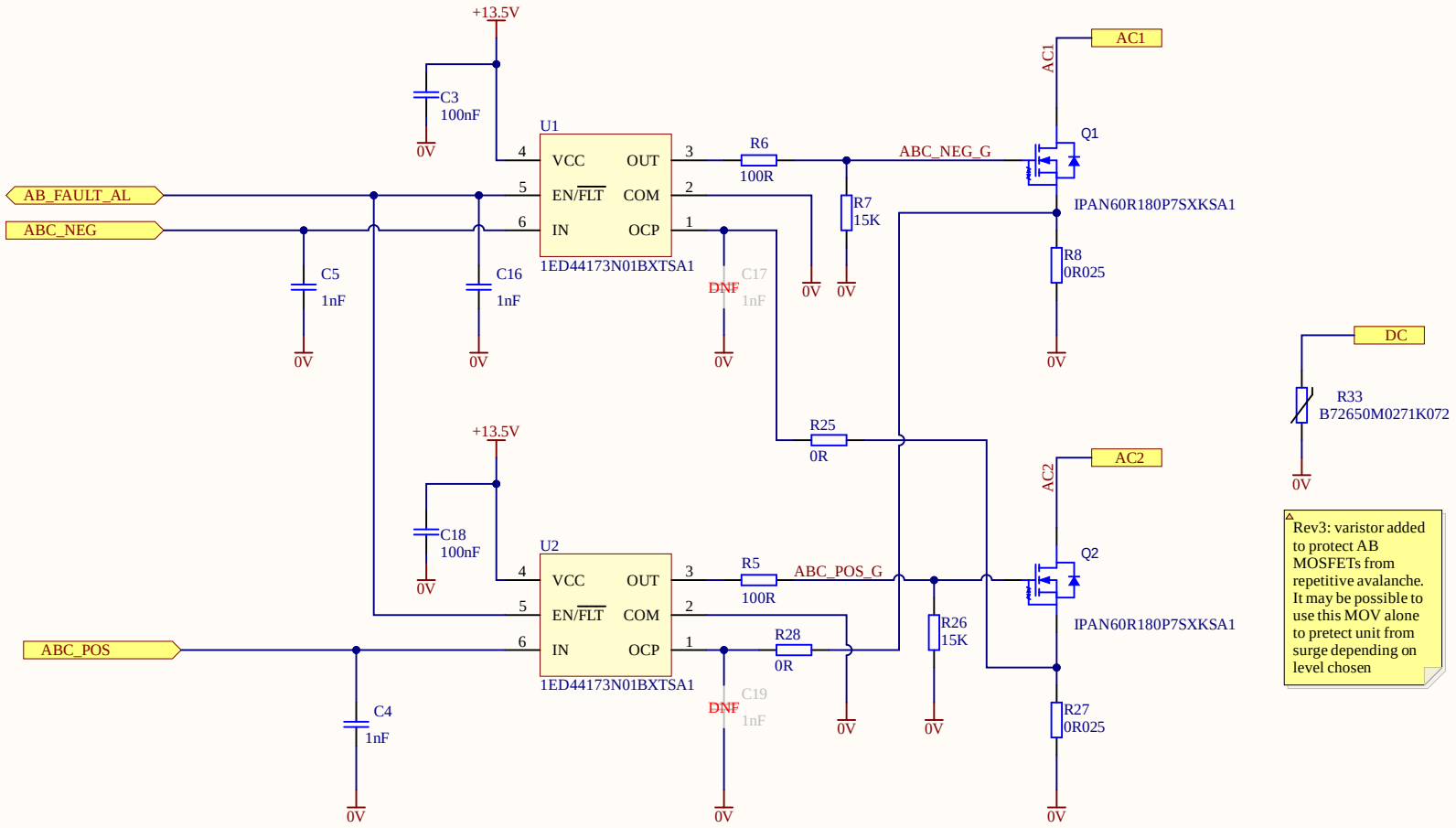

PSV-AD-250-DS

www.pulsiv.co.uk